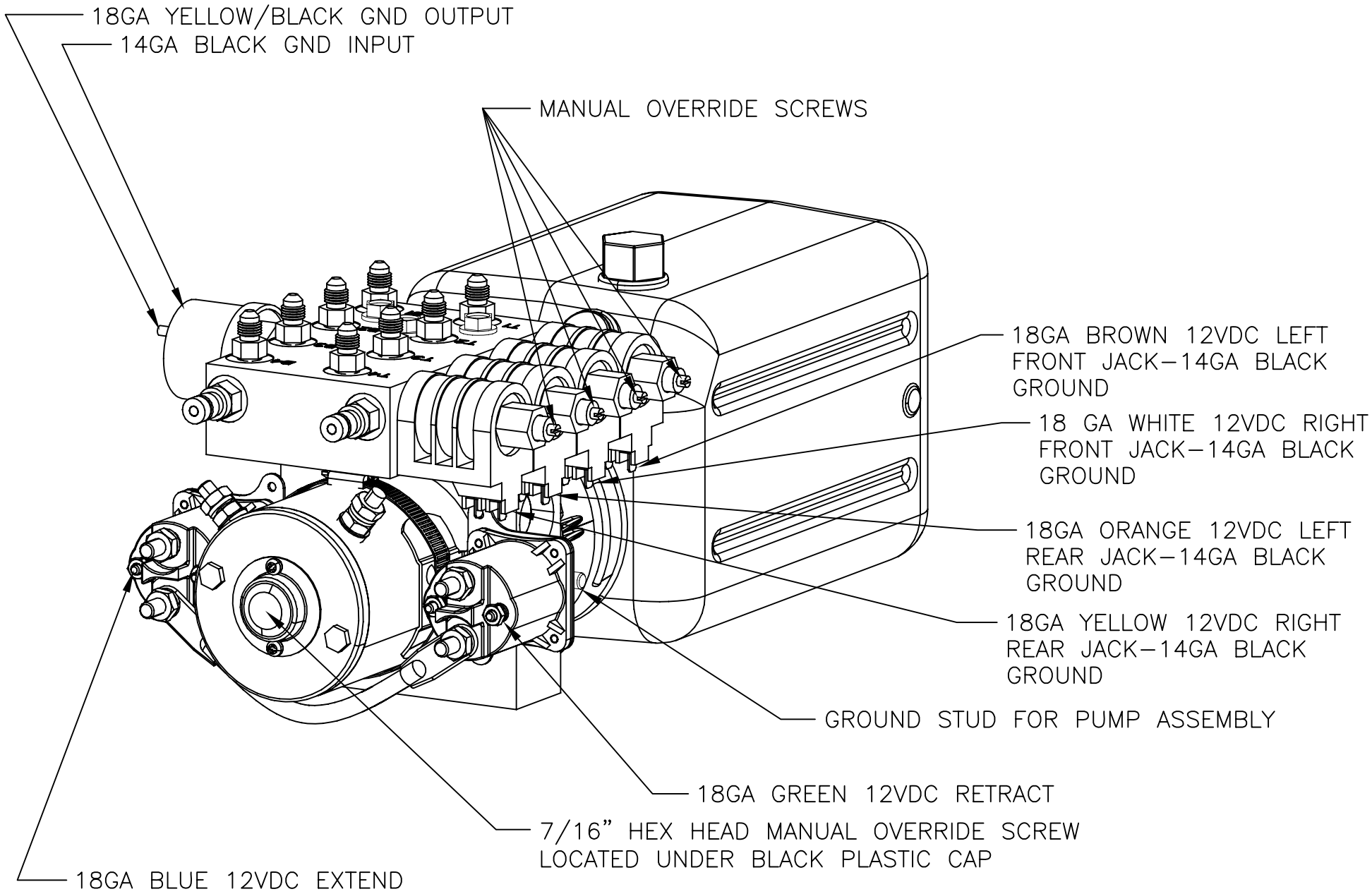HYDRAULIC PUMP FUNCTION WIRING
(BI–ROT 2390, 2532, 2542 SHOWN)